REVISIONS			
REV.	DESCRIPTION	DATE	APPROVED
1	INITIAL RELEASE	7/8/2015	GAP
A	ECN RELEASE	8/6/2015	GAP

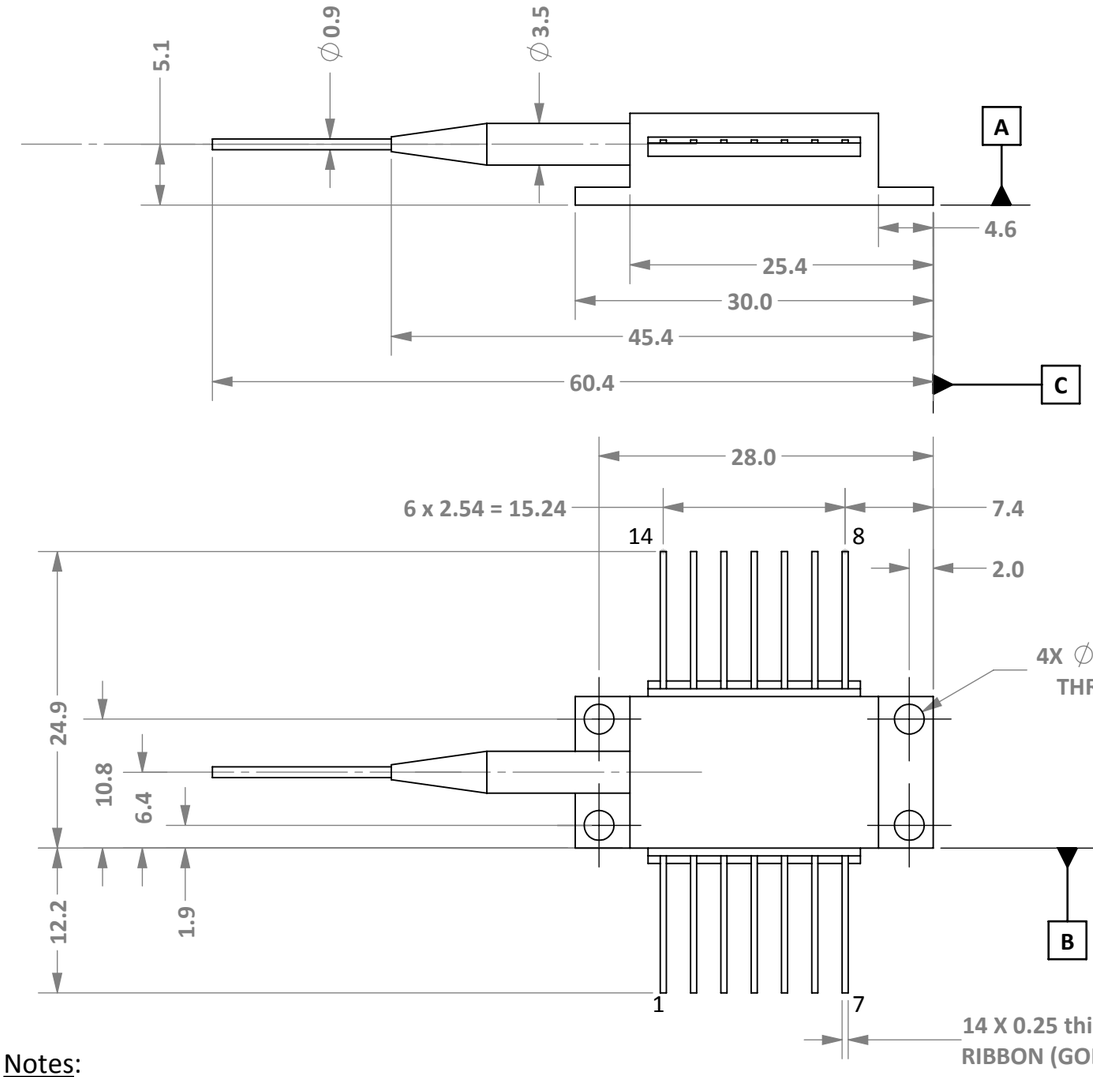

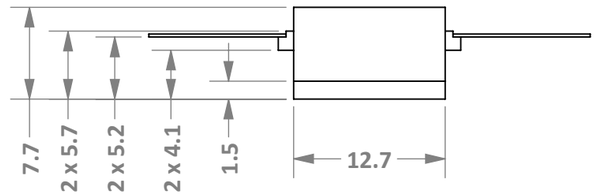

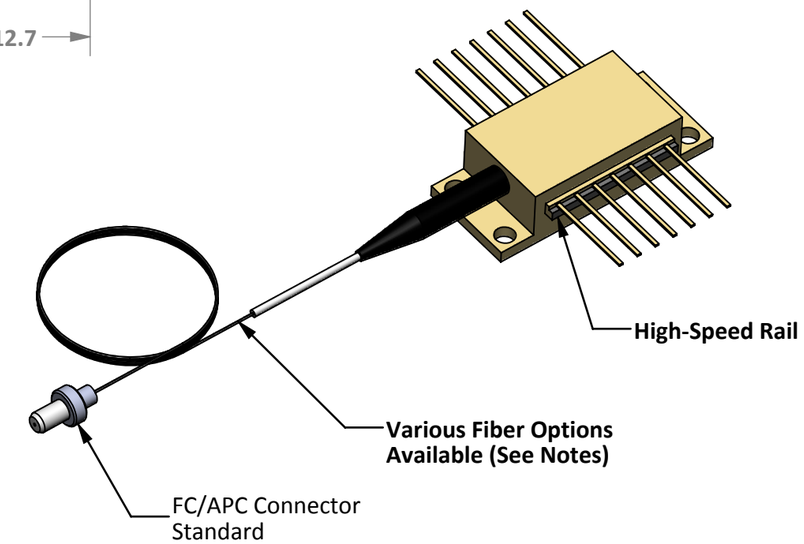

Notes:

1. Mechanical Reference only. See configurator for "BF" part numbers. Dimensions are reference only.
2. The use of a thermal pad between the package base and heat sink is **required**. Size the heatsink for the device's **operational limit** (see spec sheet).
3. Standard build includes 1 meter fiber. Various fiber, cable protection, and connector options are available.
4. A TEC-controller is **required** for operation or severe damage will occur that will destroy the device.
5. Package is hermetically sealed.
6. Connector pins are plated gold over nickel. Solder at MAX 250° C for ≤5s is recommended.

ELECTRICAL PIN-OUT			
PIN	CONNECTION	PIN	CONNECTION
1	TEC (+)	8	-
2	THERMISTOR	9	-
3	PD ANODE (+)	10	LASER ANODE (+)
4	PD CATHODE (-)	11	LASER CATHODE (-)
5	THERMISTOR	12	-
6	-	13	CASE GROUND
7	-	14	TEC (-)

DIMENSIONS mm [in]

UNLESS OTHERWISE SPECIFIED TOLERANCES ARE:
ANGULAR: ± 30 MINUTES
X ± .25 [.010]
X. X ± .13 [.005]
X.XX ± .05 [.002]
X.XXX ±.025 [.001]

CONTACT **SHEAUMANN LASER, INC.** FOR DIMENSIONS AND FEATURES NOT SHOWN. ALL INFORMATION ON THIS DRAWING SUBJECT TO CHANGE WITHOUT NOTICE.

DO NOT SCALE DRAWING

PROPRIETARY AND CONFIDENTIAL

THE INFORMATION CONTAINED IN THIS DRAWING IS THE SOLE PROPERTY OF **SHEAUMANN LASER, INC.** ANY REPRODUCTION IN PART OR AS A WHOLE WITHOUT THE WRITTEN PERMISSION OF **SHEAUMANN LASER, INC.** IS PROHIBITED.

INTERPRET GEOMETRIC TOLERANCING PER: ASME Y14.5M-1994

THIRD ANGLE PROJECTION

SHEAUMANN

TITLE:

BF

SIZE	DWG. NO.	REV
B	**RDW 840002**	**A**

SCALE: 1:1 SHEET 1 OF 1